Clarion Bathware

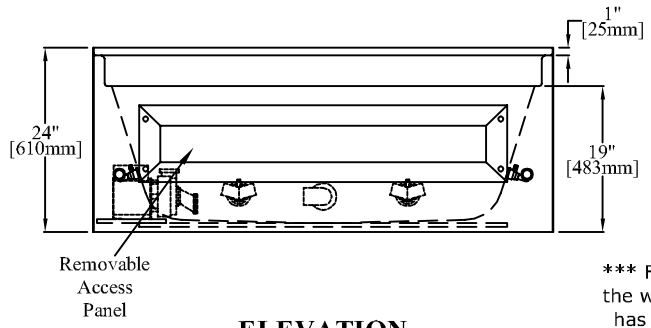

ELEVATION

*** For clarity, ***
the whirlpool piping
has been omitted
from this drawing

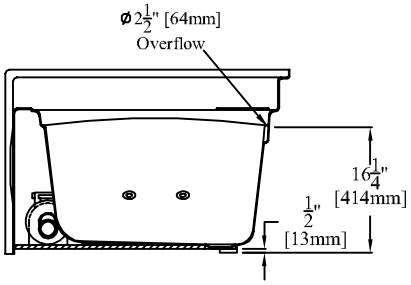

SECTION "A-A"

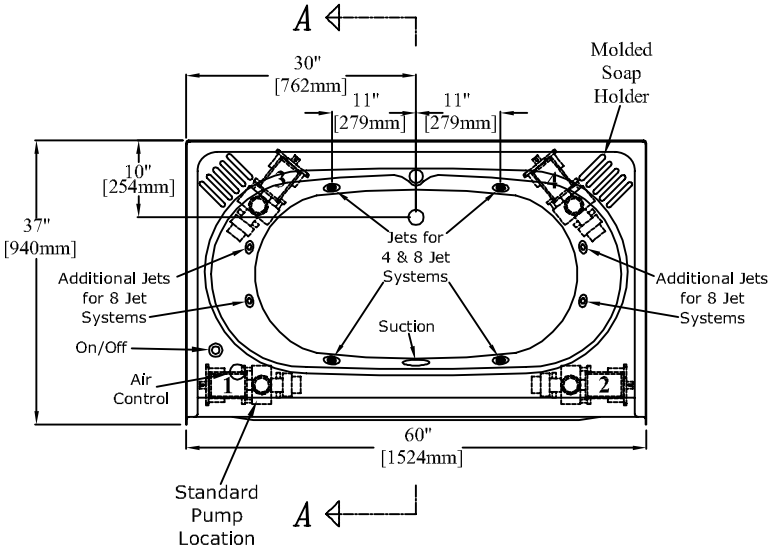

PLAN

60" [1524mm] Bathtub
With 4 or 8 Jet Whirlpool Package

REAR CENTER DRAIN

PRODUCT SPECIFICATIONS:

* Product complies with NAHB, HUD UM-73A, and ANSI-Z124.1.
* Wood reinforced & slip resistant floor.
* Integral 1" [25mm] nailing flange.
* Factory drilled 2 1/2" [64mm] overflow.
* Bathwell Dimensions (At Top): W-53 1/4" [1353mm]
  D-27 1/4" [692mm]
  H-17 1/4" [438mm]
* Bathwell Dimensions (At Bottom): W-41" [1041mm]
  D-20 3/4" [527mm]
* Bathwell Capacity (At Overflow): 55 Gallons [208L]
* Water Level (At Overflow): 13 3/4" [349mm]
* This unit is available without an overflow (Model RE3637AM/4 or RE3637AM/8).
* This unit is available without a removable access panel. (Model RE3637/4, RE3637M/4, RE3637/8, or RE3637M/8)
* The pump positions labeled 2, 3 & 4 are pump locations that are available.
* All dimensions +/- 1/4" [6.4mm]
* Clarion Bathware reserves the right to change design and/or dimensions.
* Dimensions are the same for RE, RS, MP, CU, and all other versions of this model.

RE3637A/4 or RE3637A/8

60" Bathtub with Removable Access Panel & 4 or 8 Jet Whirlpool Package

Clarion BATHWARE
44 Amsler Ave.
Shippenville, PA 16254

Phone: (814) 226-5374
Toll Free: (800) 576-9228
Fax: (814) 226-0730
www.clarionbathware.com

Signatures For Approval:		Date:
Customer:		
Arch./Engr:		
Contractor:		
Cla. Engr:		

Dwg. Name: RE3637A -4&8JETCUT

Dwg. By: DJC
DATE: 10/30/07