Clarion BATHWARE

INDEPENDENCE LINE®

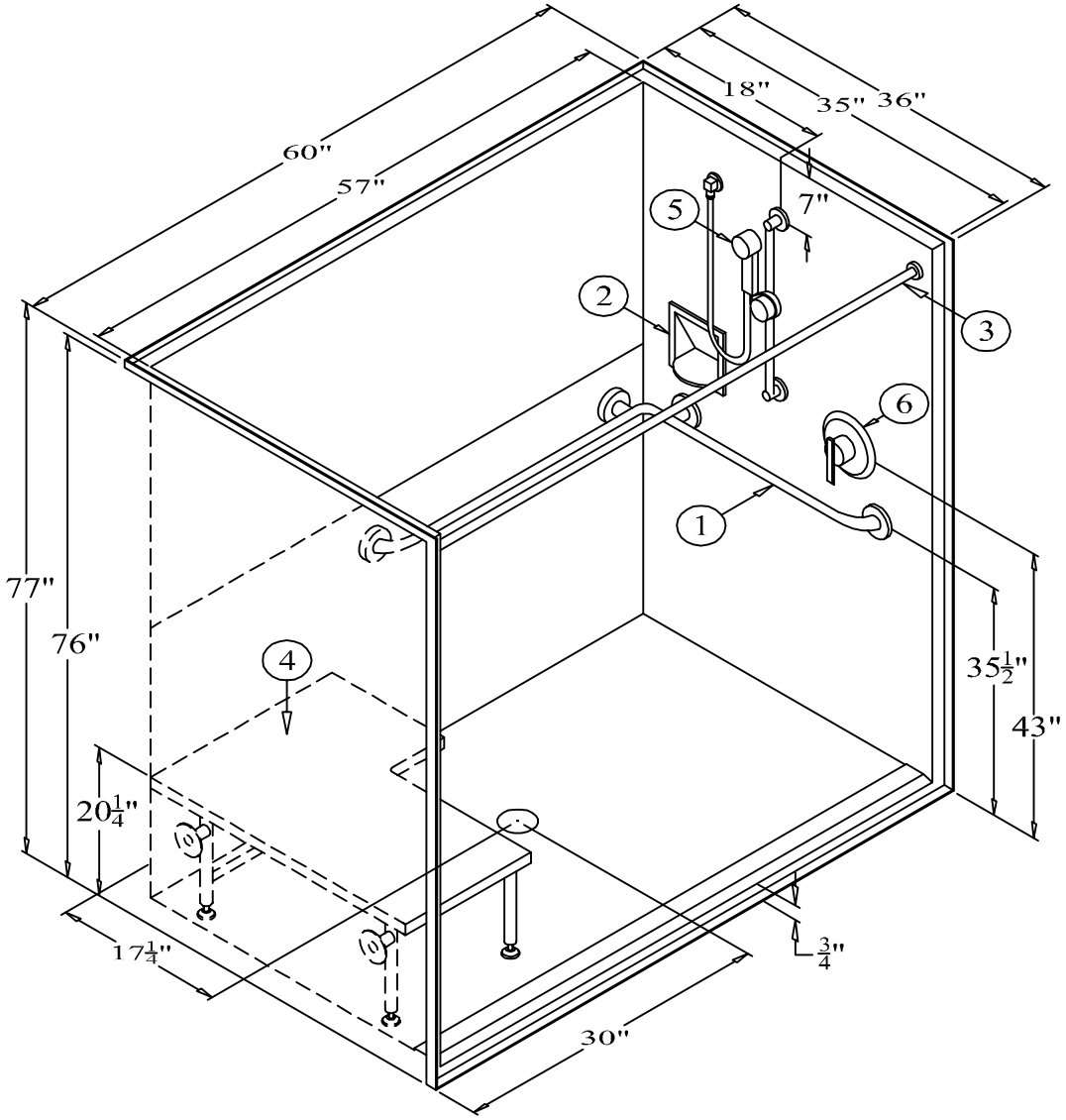

Model 6036BF34 SHOWER STALL

60" 1-Piece Barrier Free Shower with 3/4" Threshold and Center Drain

RECOMMENDED ACCESSORIES

1. GRAB BAR #504228TS
2. SOAP DISH #660
3. CURTAIN ROD #IN-57
4. FOLDING SHOWER SEAT #400 N/L-LH-28"-SDL
5. SHOWER HEAD #ZHGB-24
6. SHOWER CONTROLS #CH-SSMV-1

Also accepts Clarion Bathware Model IN60C cap (adds 6" to overall height)

Clarion BATHWARE
44 Amsler Ave.
Shippenville, PA 16254

Phone: (814) 226-5374
Toll Free: (800) 576-9228
Fax: (814) 226-0730
www.clarionbathware.com

Signatures For Approval: Date:
Customer: _____ _____
Arch./Engr: _____ _____
Contractor: _____ _____
Cla. Engr: _____ _____

Dwg. Name: 6036BF34 -ISO1

Dwg. By: DJC
DATE: 8/5/09