Clarion BATHWARE

INDEPENDENCE LINE®

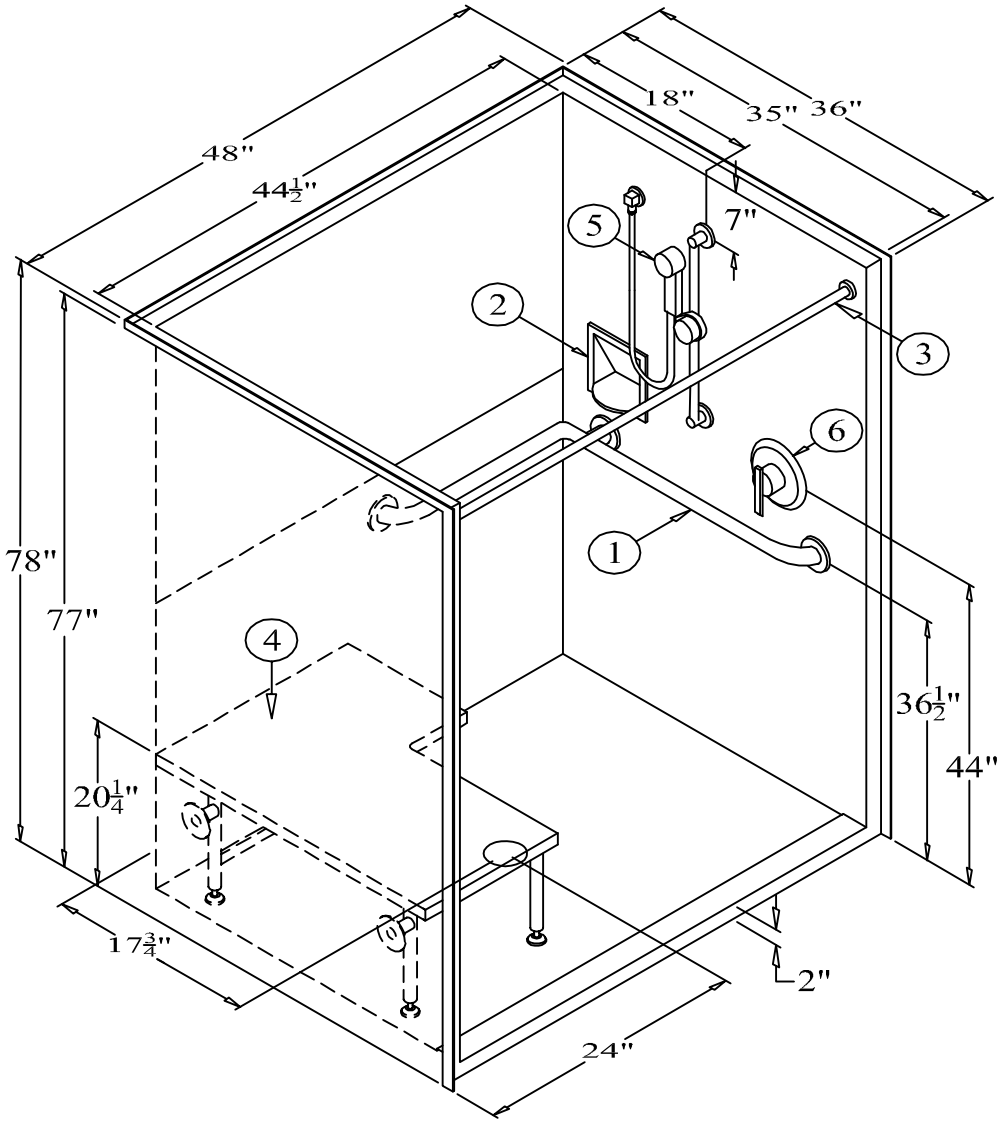

4836BF SHOWER STALL

48" 1-Piece Barrier Free Shower with 2" Threshold and Center Drain

RECOMMENDED ACCESSORIES

1. GRAB BAR #502528TS
2. SOAP DISH #660
3. CURTAIN ROD #IN-44 1/2
4. FOLDING SHOWER SEAT #400 N/L-LH-28"-SDL
5. SHOWER HEAD #ZHGB-24
6. SHOWER CONTROLS #CH-SSMV-1

Clarion BATHWARE
44 Amsler Ave.
Shippenville, PA 16254

Phone: (814) 226-5374
Toll Free: (800) 576-9228
Fax: (814) 226-0730
www.clarionbathware.com

Signatures For Approval: Date:
Customer: _____ _____
Arch./Engr: _____ _____
Contractor: _____ _____
Cla. Engr: _____ _____

Dwg. Name: 4836BF-ISO1

Dwg. By: DJC
DATE: 8/5/09