Clarion BATHWARE

INDEPENDENCE LINE®

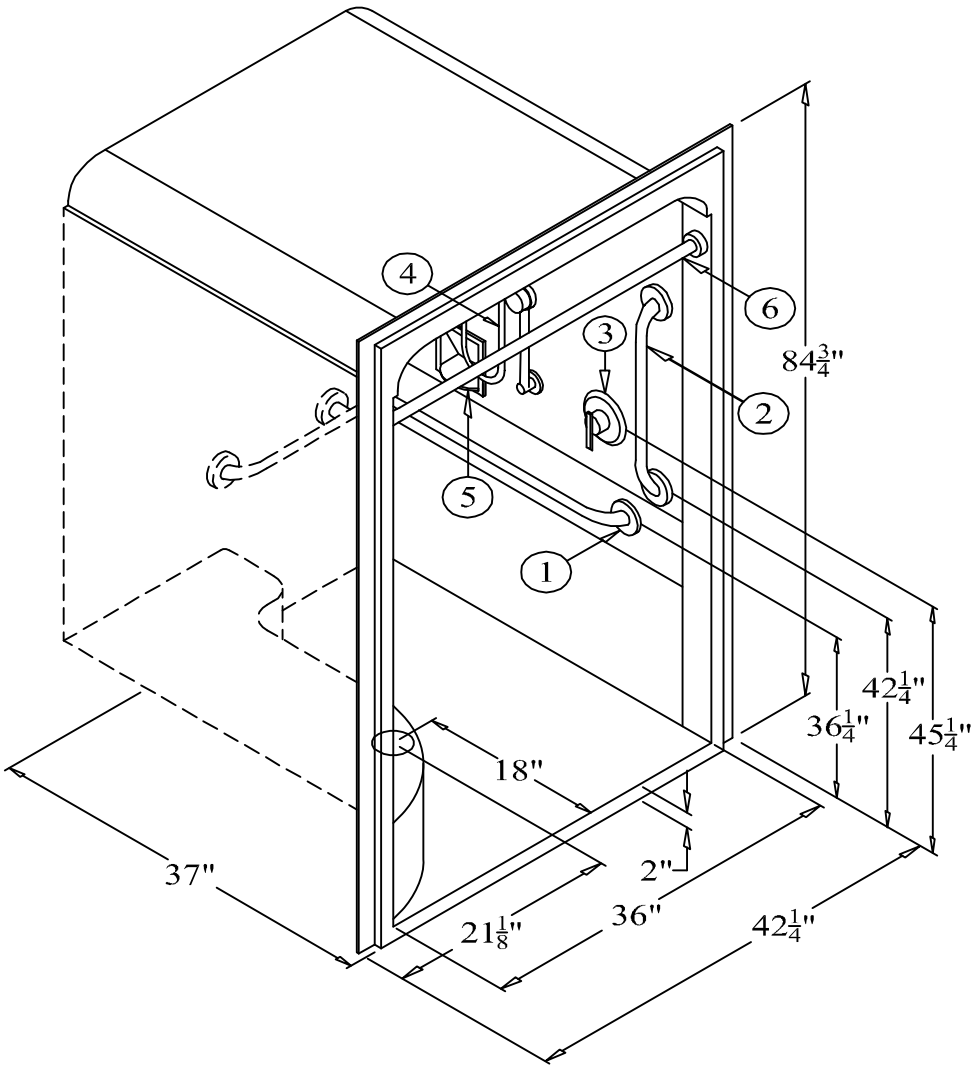

MODEL AN4136LBF/S or AN4136RBF/S

40" Acrylic Barrier Free Shower with 2" Threshold,
Left or Right Hand Valve Wall, Molded Dome & Seat

Right Hand Version (AN4136RBF/S) Shown

RECOMMENDED ACCESSORIES

1. GRAB BAR #503016TS
2. GRAB BAR #5018
3. SHOWER CONTROLS #CH-SSMV-1
4. SHOWER HEAD #ZHGB-24
5. SOAP DISH #660
6. CURTAIN ROD #IN-36

Clarion BATHWARE
44 Amsler Ave.
Shippenville, PA 16254

Phone: (814) 226-5374
Toll Free: (800) 576-9228
Fax: (814) 226-0730
www.clarionbathware.com

Signatures For Approval: Date:
Customer: _____ _____
Arch./Engr: _____ _____
Contractor: _____ _____
Cla. Engr: _____ _____

Dwg. Name: AN4136LBF/S orRBF/S-ISO1

Dwg. By: DJC
DATE: 3/6/09