Clarion BATHWARE

INDEPENDENCE LINE®

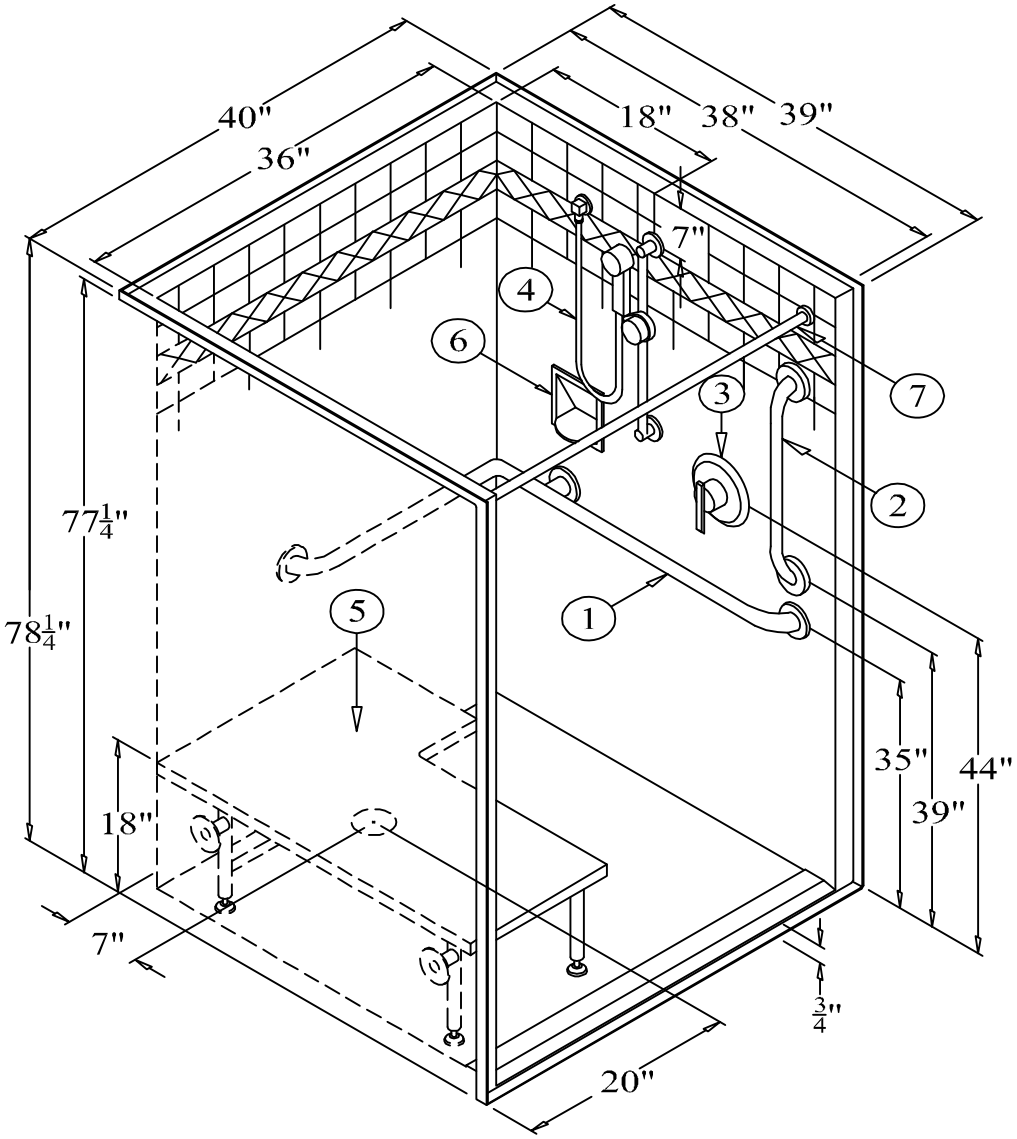

MODEL 8940BF34

40" Tiled Barrier Free Shower with 3/4" Threshold
& Rear Center Drain

RECOMMENDED ACCESSORIES

1. GRAB BAR #503218TS
2. GRAB BAR #5018 (For ANSI A117.1 Compliance)
3. SHOWER CONTROLS #CH-SSMV-1
4. SHOWER HEAD #ZHGB-24
5. FOLDING SHOWER SEAT #400 N/L-LH-32"-SDL
6. SOAP DISH #660
7. CURTAIN ROD #IN-36

Clarion BATHWARE
44 Amsler Ave.
Shippenville, PA 16254

Phone: (814) 226-5374
Toll Free: (800) 576-9228
Fax: (814) 226-0730
www.clarionbathware.com

Signatures For Approval: Date:
Customer: _____ _____
Arch./Engr: _____ _____
Contractor: _____ _____
Cla. Engr: _____ _____

Dwg. Name: 8940BF34 -ISO1

Dwg. By: DJC
DATE: 8/6/09