Clarion BATHWARE

INDEPENDENCE LINE®

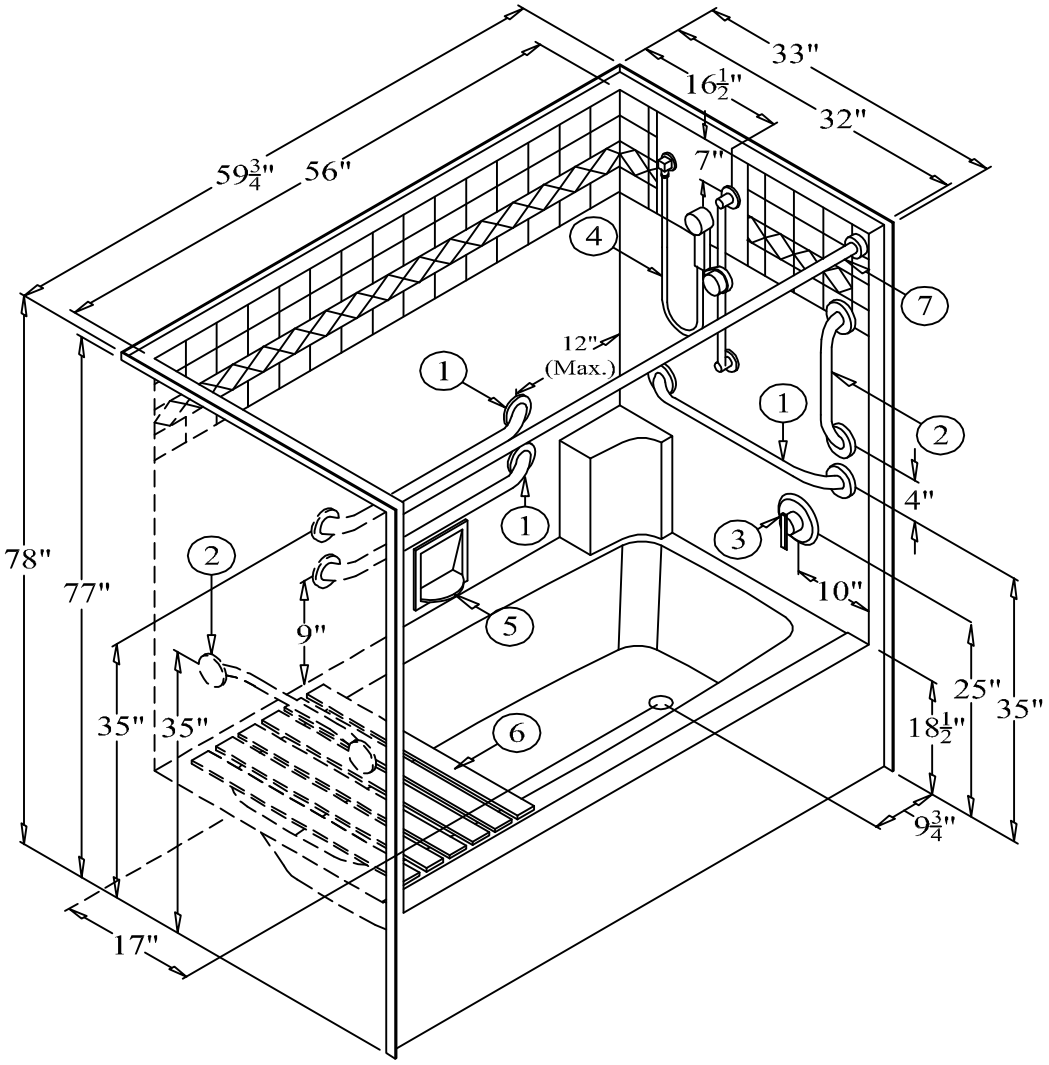

8011LSDX or 8011RSDX

60" 1-Piece Tiled Tub/Shower with Left or Right Hand Drain

Right Hand Version (8011RSDX) Shown

RECOMMENDED ACCESSORIES

1. GRAB BAR #5024 (3 Reqd.)
2. GRAB BARS #5018 (2 Reqd.)
3. SHOWER CONTROLS #CH-SSMV-1
4. SHOWER HEAD #ZHGB-24
5. SOAP DISH #660
6. SHOWER SEAT Removable or Folding
7. CURTAIN ROD #IN-56

Clarion BATHWARE
44 Amsler Ave.
Shippenville, PA 16254

Phone: (814) 226-5374
Toll Free: (800) 576-9228
Fax: (814) 226-0730
www.clarionbathware.com

Signatures For Approval: Date:
Customer: _____ _____
Arch./Engr: _____ _____
Contractor: _____ _____
Cla. Engr: _____ _____

Dwg. Name: 8011LSDXor 8011RSDX-ISO1

Dwg. By: DJC
DATE: 4/1/10