Clarion BATHWARE

INDEPENDENCE LINE®

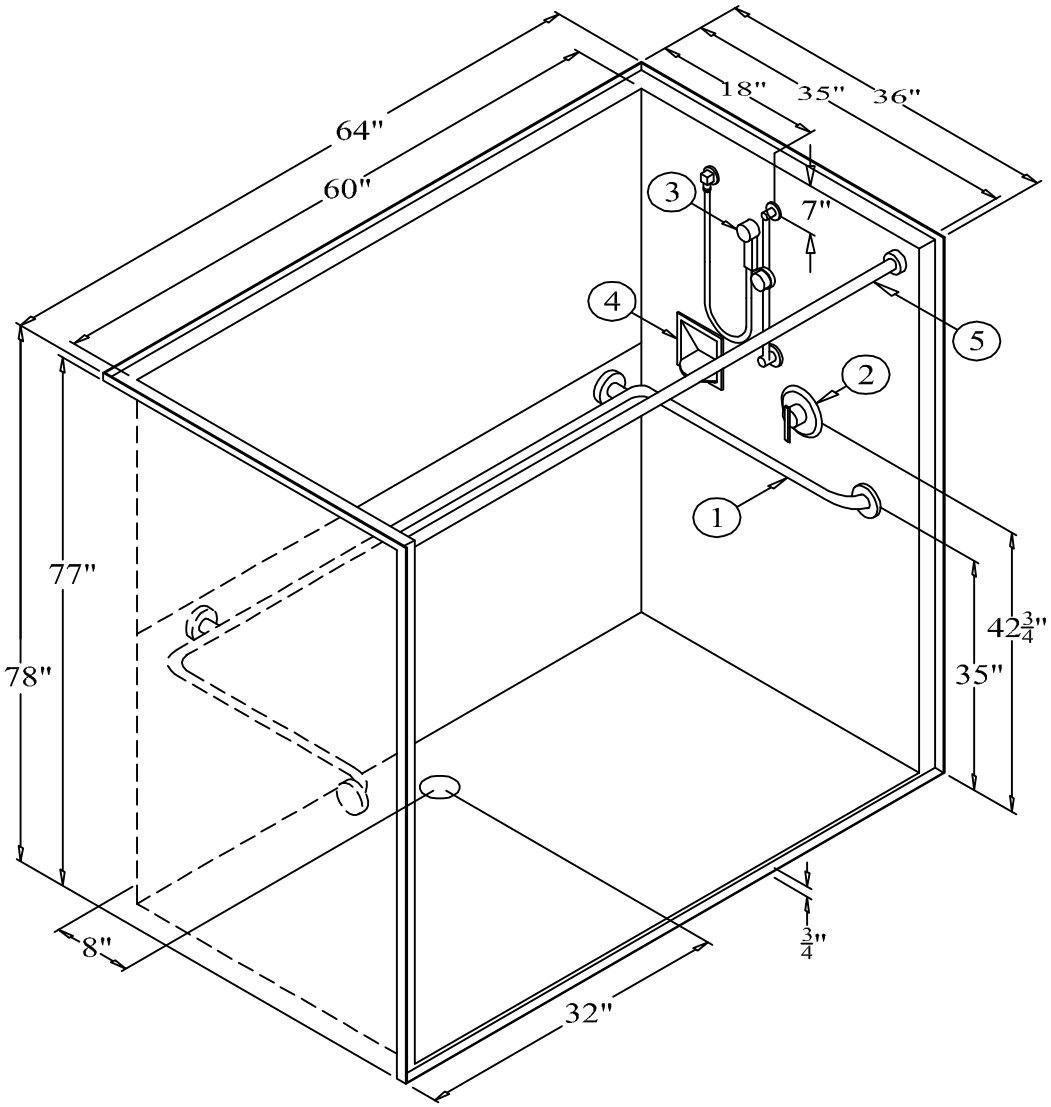

MODEL 6436BF34

64" Barrier Free Shower with 3/4" Threshold
& Rear Center Drain

RECOMMENDED ACCESSORIES

1. GRAB BAR #28 x 60 x 28
2. SHOWER CONTROLS #CH-SSMV-1
3. SHOWER HEAD #ZHGB-24
4. SOAP DISH #660
5. CURTAIN ROD #IN-60

Clarion BATHWARE
44 Amsler Ave.
Shippenville, PA 16254

Phone: (814) 226-5374
Toll Free: (800) 576-9228
Fax: (814) 226-0730
www.clarionbathware.com

Signatures For Approval: Date:
Customer: _____ _____
Arch./Engr: _____ _____
Contractor: _____ _____
Cla. Engr: _____ _____

Dwg. Name: 6436BF34 -ISO2

Dwg. By: DJC
DATE: 2/19/09