Clarion BATHWARE

INDEPENDENCE LINE®

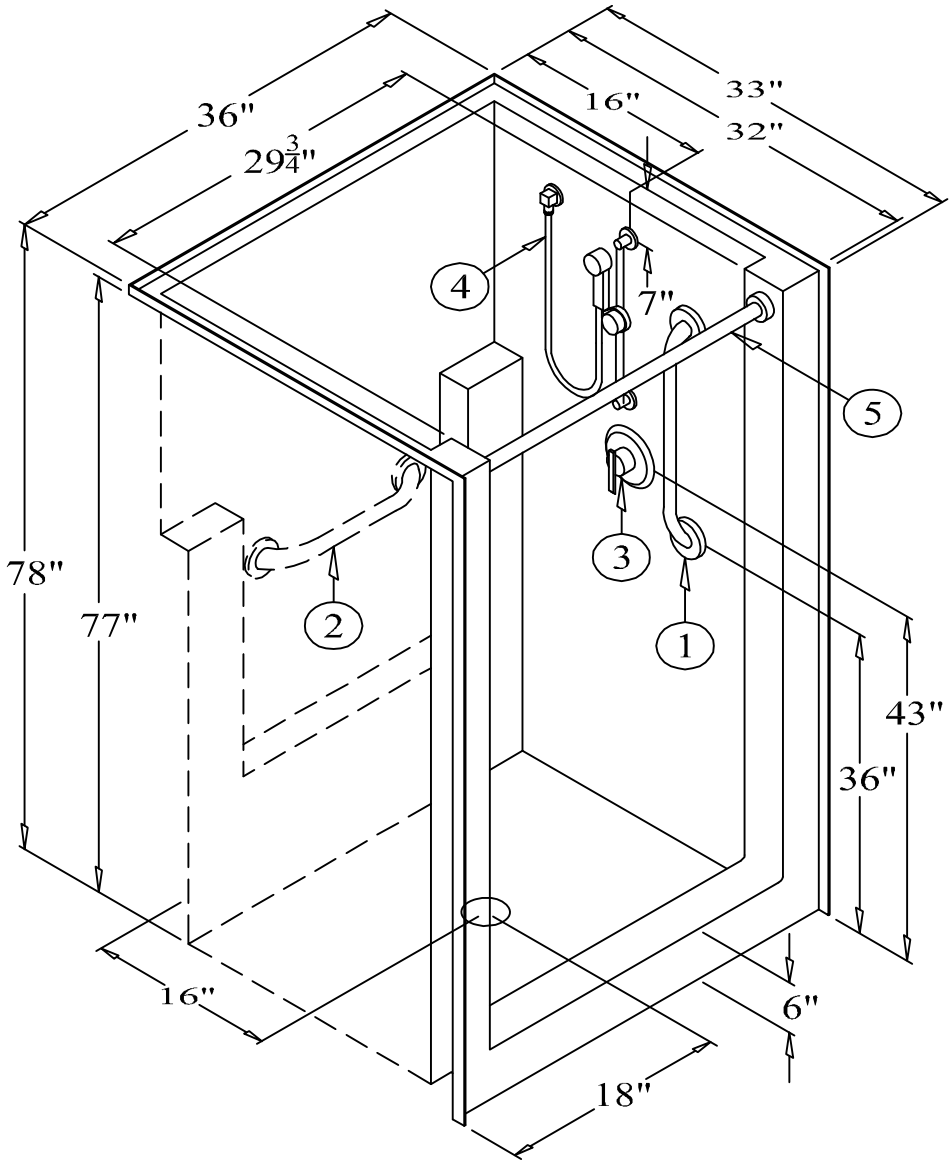

MODEL 3632SD

36" 1-Piece Shower with Molded Soap Ledges, Molded Foot Rest & Center Drain

RECOMMENDED ACCESSORIES

1. GRAB BAR #5018
2. GRAB BAR #5016
3. SHOWER CONTROLS #CH-SSMV-1
4. SHOWER HEAD #ZHGB-24
5. CURTAIN ROD #IN-30

Clarion BATHWARE
44 Amsler Ave.
Shippenville, PA 16254

Phone: (814) 226-5374
Toll Free: (800) 576-9228
Fax: (814) 226-0730
www.clarionbathware.com

Signatures For Approval: Date:
Customer: _____ _____
Arch./Engr: _____ _____
Contractor: _____ _____
Cla. Engr: _____ _____

Dwg. Name: 3632SD-ISO1

Dwg. By: DJC
DATE: 3/19/09