Clarion BATHWARE Independence Line®

Left Hand Version
(4MS11L) Shown

Quantum Series

Right hand wall removed for clarity.
1-1/4" Grab Bars are available
in White or Textured White.

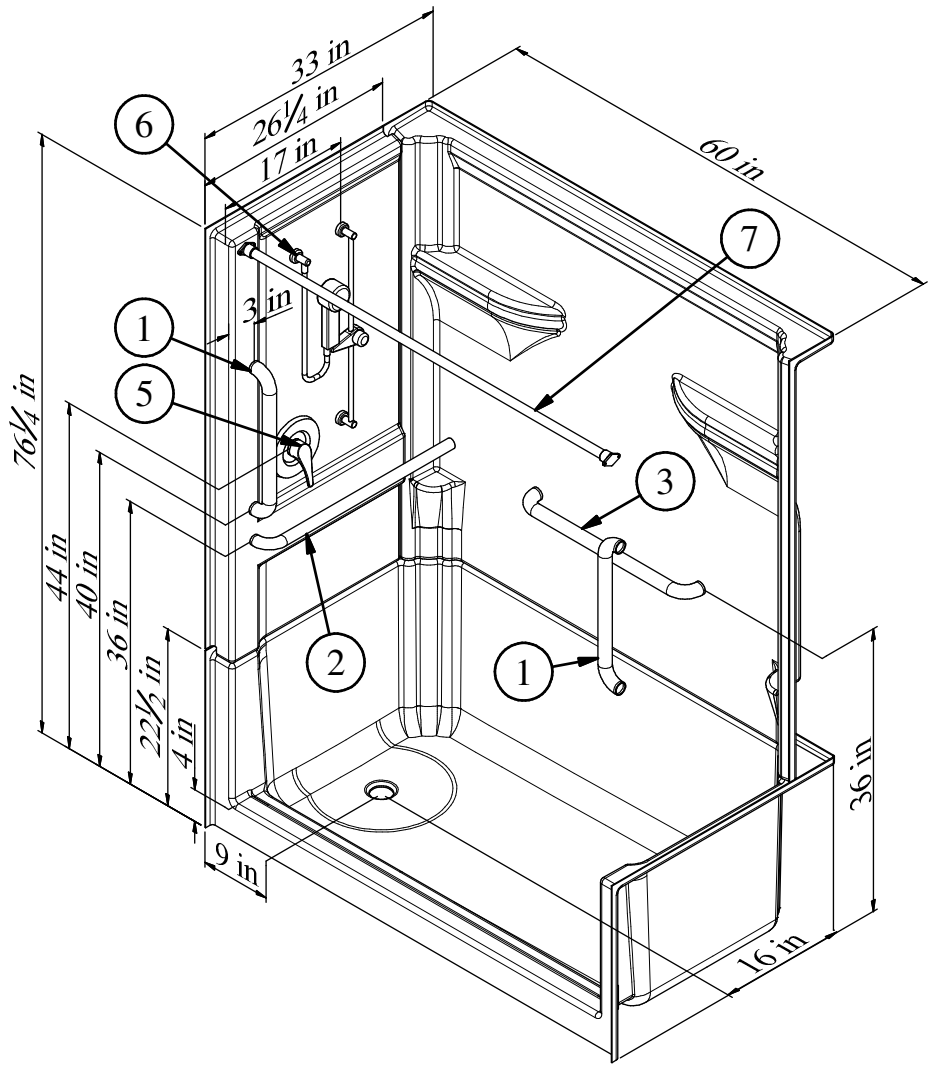

4MS11L or 4MS11R

60" [1524mm] 4-Piece Shower w/ 4" [102mm] Threshold, Left or Right Hand Drain, & Molded Shelving

RECOMMENDED ACCESSORIES

1. 18" WHITE GRAB BAR (Qty 2)
2. 26 3/4" WHITE GRAB BAR
3. 24" WHITE GRAB BAR
4. BRASS DRAIN (Not Shown)
5. #CH-SSMV-1 MIXING VALVE
6. #HHS-30CE HAND HELD SHWR
7. #CR-54 CURTAIN ROD
8. PREMIUM SHOWER CURTAIN (Not Shown)

Clarion BATHWARE
44 Amsler Ave.
Shippenville, PA 16254

Phone: (814) 226-5374
Toll Free: (800) 576-9228
Fax: (814) 226-0730
www.clarionbathware.com

Signatures For Approval: Date:
Customer: _____ _____
Arch./Engr: _____ _____

Quote #: _____ _____
Job Name: _____ _____

DWG. #
4MS11L or R-ISO2

By: NMH
Date: 1/11/2018

IMPOTANT NOTICE
Clarion bathware reserces the right to change the design and/or dimensions of its products at any time. This drawing may have been updated since this publication was issued. Before placing an order for any product, refer to our website at www.clarionbathware.com to obtain the most current drawings for any products that you wish to purchase. Compare the date of revision of the drawing that you have with the one on the drawing on our website.
If you do not have internet access, please call your sales representative or Clarion Bathware's sales department at 1-800-576-9228.